Journal of the Operations Research
Society of Japan
2005, Vol. 48, No. 2, 111-122

ON THE SERIES EXPANSION FOR THE STATIONARY PROBABILITIES OF AN M/D/1 QUEUE

Kenji Nakagawa
Nagaoka University of Technology

(Received August 27, 2003; Revised July 20, 2004)

Abstract In this paper, we give the series expansion for the stationary probabilities π_n of the queue length of an M/D/1 queue based on analytic properties of the probability generating function $\pi(z)$. We determine the poles and their associated residues of $\pi(z)$, then give the partial fraction expansion of $\pi(z)$. The series expansion of π_n are given by the poles and residues. We also give an upper bound and a lower bound for π_n.

Keywords: Queue, M/D/1, stationary distribution, series expansion, complex function theory

1. Introduction

We study the stationary probabilities π_n of the queue length of an M/D/1 queue. We determine the poles and their associated residues of the probability generating function $\pi(z)$ of π_n. Then we have the series expansion of π_n represented by the poles and residues. Moreover, we give an upper and lower bounds for π_n.

2. The Stationary Distribution of an M/D/1 Queue

The state transition probability matrix P of an M/D/1 queue with arrival rate λ and service rate 1 is given by

$$P = \begin{pmatrix} a_0 & a_1 & a_2 & a_3 & \dots \\ a_0 & a_1 & a_2 & a_3 & \dots \\ 0 & a_0 & a_1 & a_2 & \dots \\ 0 & 0 & a_0 & a_1 & \dots \\ \vdots & \vdots & \vdots & \vdots & \ddots \end{pmatrix}, \ a_n = \frac{\lambda^n}{n!}e^{-\lambda}, \ n = 0, 1, \dots. \tag{2.1}$$

For the stability of the queue, $\lambda < 1$ is assumed. Let $\pi = (\pi_0, \pi_1, \dots)$ denote the stationary distribution of P, and define the probability generating function $\pi(z)$ of π by

$$\pi(z) \equiv \sum_{n=0}^{\infty} \pi_n z^n. \tag{2.2}$$

By the Pollaczek-Khinchin formula [2], we have

$$\pi(z) = \frac{(1-\lambda)(z-1)\exp(\lambda(z-1))}{z - \exp(\lambda(z-1))}. \tag{2.3}$$

It is well known [1] that the explicit form of π_n is given by the Taylor expansion of $\pi(z)$, i.e.,

$$\begin{aligned}
\pi_0 &= 1-\lambda \\
\pi_1 &= (1-\lambda)(e^{\lambda}-1) \\
\pi_n &= (1-\lambda)\Big(e^{n\lambda} + \sum_{k=1}^{n-1} e^{k\lambda}(-1)^{n-k}\Big[\frac{(k\lambda)^{n-k}}{(n-k)!} + \frac{(k\lambda)^{n-k-1}}{(n-k-1)!}\Big]\Big), \ n \geq 2. \qquad (2.4)
\end{aligned}$$

But, it is not good to use this formula for calculation because it includes alternating additions of positive and negative numbers of very large absolute value.

We will have a series expansion of π_n by investigating analytic properties of $\pi(z)$, especially the poles and their associated residues. Our series expansion is interesting from both theoretical and numerical point of view. Theoretically, all the poles and their associated residues of $\pi(z)$ are first determined in this paper. Numerically, our formula gives very stable computation of π_n because each term of the series decreases very quickly.

We first determine all the poles of $\pi(z)$ in $|z| < \infty$. Denote by $\psi(z) \equiv z - \exp(\lambda(z-1))$ the denominator of $\pi(z)$. We show in Figure 1 the zeros of $\psi(z)$ with $\lambda = 0.5$ obtained by numerical computation. In Figure 1, the x-coordinate is the real part of z and the y-coordinate is the imaginary part.

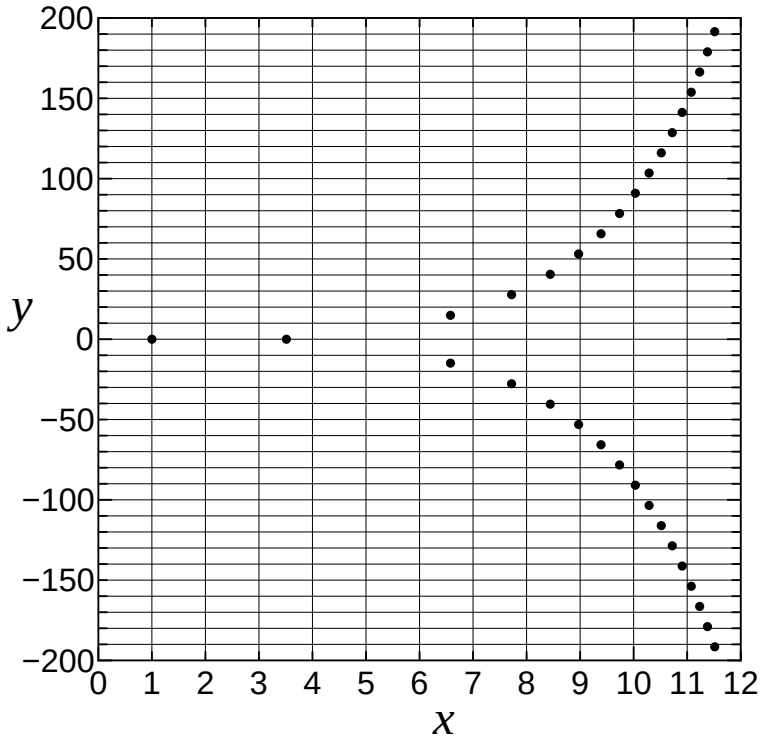

Figure 1: The zeros of $\psi(z) = z - \exp(\lambda(z-1)),\ \lambda = 0.5,\ z = x + iy$

We can see that there are infinitely many zeros and among them the real zeros are $z = 1$ and $z = 3.512$. Since $\psi(z)$ is a function of real coefficients, if a complex number is a zero of $\psi(z)$, then so is its complex conjugate. Further, the difference of the imaginary part of adjacent zeros seems nearly constant.

3. On the Position of the Zeros of $\psi(z)$

In order to study the position of the zeros of $\psi(z) = z - \exp(\lambda(z-1))$, we define sets $S_k,\ k \in \mathbb{Z}$ by

$$S_k = \{z = x + iy | -\infty < x < \infty,\ \frac{2\pi k - \pi}{\lambda} \le y < \frac{2\pi k + \pi}{\lambda}\},\ k \in \mathbb{Z}, \tag{3.1}$$

where $\mathbb{Z}$ is the set of integers. S_k is a horizontal strip. We see $S_k \cap S_{k'} = \phi,\ k \neq k'$ and $\bigcup_{k\in\mathbb{Z}} S_k = \mathbb{C}$, the whole finite complex plane.

We have the following theorem.

Theorem 3.1 (i) *$\psi(z)$ has two zeros $z = 1$ and $z = \zeta_0 > 1$ in S_0, both of which are simple zeros.*
(ii) For $k \neq 0$, *$\psi(z)$ has a unique zero ζ_k in S_k, which is a simple zero. ζ_k and ζ_{-k} are complex conjugate.*

Proof: (i) From the graphs of $Y = x$ and $Y = \exp(\lambda(x-1))$, we see that $\psi(z)$ has two real zeros $x = 1$ and $x = \zeta_0 > 1$. We show that these are the only zeros in S_0. We will apply the argument principle of complex function theory.

For sufficiently large $R > 0$, consider four points

$$z_1 = R + i\frac{\pi}{\lambda},\quad z_2 = -R + i\frac{\pi}{\lambda},\quad z_3 = -R - i\frac{\pi}{\lambda},\quad z_4 = R - i\frac{\pi}{\lambda}$$

on the boundary of S_0. (z_j belongs to the jth orthant, $j = 1, \ldots, 4$.) Let C_1 denote the line segment whose starting point is z_1 and ending point z_2. Similarly, let C_j denote the line segment from z_j to $z_{j+1},\ j = 1, \ldots, 4$, with regarding $z_5 = z_1$. Let C denote the closed curve which is made by connecting $C_1, \ldots, C_4$. The images of $z_j,\ C_j$, and C by the mapping $\psi(z)$ are denoted by $z'_j,\ C'_j$, and C', respectively. We have

$$\begin{aligned} z'_1 &= R + e^{\lambda(R-1)} + i\frac{\pi}{\lambda}, \quad z'_2 = -R + e^{\lambda(-R-1)} + i\frac{\pi}{\lambda}, \\ z'_3 &= -R + e^{\lambda(-R-1)} - i\frac{\pi}{\lambda}, \quad z'_4 = R + e^{\lambda(R-1)} - i\frac{\pi}{\lambda}. \end{aligned}$$

(z'_j belongs to the jth orthant, $j = 1, \ldots, 4$.) We see that C'_1 is the line segment with starting point z'_1 and ending point z'_2, and C'_3 is the line segment with starting point z'_3 and ending point z'_4. For sufficiently large R, $\psi(z)$ is nearly the identity mapping on C_2, hence C'_2 is contained in a sufficiently small neighborhood of the line segment connecting z'_2 and z'_3. Thus, $C'_1C'_2C'_3$ is a curve which starts from z'_1 in the first orthant, passes through z'_2 in the second orthant and z'_3 in the third orthant, and finally ends at the z'_4 in the fourth orthant. In other words, $C'_1C'_2C'_3$ nearly goes round about the origin (see Figure 2).

For large R, the difference of the arguments between z'_1 and z'_4 is small, hence, the change of the argument along the curve $C'_1C'_2C'_3$ is nearly 2π. In other words, for any $\epsilon > 0$ and sufficiently large R, we have

$$\Big| \int_{C_1C_2C_3} d\arg\psi(z) - 2\pi \Big| < \epsilon. \tag{3.2}$$

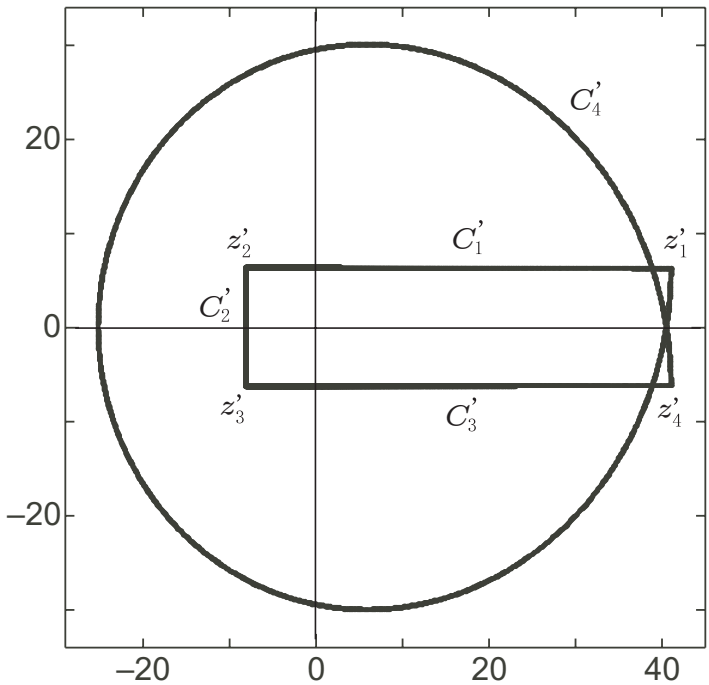

Figure 2: The image C' of C by the mapping $\psi(z)$ ($\lambda = 0.5,\ k = 0,\ R = 8$)

Next, we consider the change of the argument along C_4'. Represent a point z_t on C_4 by

$$\begin{aligned} z_t &= (1-t)z_4 + tz_1 \\ &= R + i\frac{(2t-1)\pi}{\lambda}, \quad 0 \le t \le 1. \end{aligned}$$

Denoting by z_t' the image of z_t by the mapping $\psi(z)$, we have

$$z_t' = \exp(\lambda(R-1) + i2\pi t)(1+\delta), \tag{3.3}$$

$$\text{where} \quad \delta = (R + i\frac{(2t-1)\pi}{\lambda})/\exp(\lambda(R-1) + i2\pi t).$$

If R is large, then $|\delta|$ is small and hence the change of $\arg(1+\delta)$ along C_4 is small. From (3.3), we have $\arg z_t' = 2\pi t + \arg(1+\delta)$ and thus

$$\int_{C_4'} d\arg z_t' = \int_0^1 2\pi dt + \int_{C_4'} d\arg(1+\delta). \tag{3.4}$$

Therefore, for any $\epsilon > 0$ and sufficiently large R, we have

$$\Big| \int_{C_4} d\arg\psi(z) - 2\pi \Big| < \epsilon. \tag{3.5}$$

From (3.2), (3.5), we have

$$\Big| \frac{1}{2\pi} \int_C d\arg\psi(z) - 2 \Big| < \frac{\epsilon}{\pi}. \tag{3.6}$$

$(1/2\pi)\int_C d\arg\psi(z)$ is the number of rotation of the closed curve $C' = \psi(C)$ around the origin $z' = 0$, so it is an integer. From (3.6), we have

$$\frac{1}{2\pi}\int_C d\arg\psi(z) = 2. \tag{3.7}$$

By the argument principle, we see that $\psi(z)$ has exactly two zeros in the region surrounded by the closed curve C, which are $z = 1$ and $z = \zeta_0$. Letting R tend to infinity, we know that $z = 1,\ \zeta_0$ are the only zeros in S_0 and they are both simple zeros.

(ii) Let $k > 0$. Consider four points

$$z_1 = R + i\frac{2\pi k + \pi}{\lambda},\ z_2 = -R + i\frac{2\pi k + \pi}{\lambda},$$
$$z_3 = -R + i\frac{2\pi k - \pi}{\lambda},\ z_4 = R + i\frac{2\pi k - \pi}{\lambda}$$

on the boundary of S_k, and define C_j as the line segment from z_j to $z_{j+1},\ j = 1, \ldots, 4$, with regarding $z_5 = z_1$. Let C denote the closed curve connecting $C_1, \ldots, C_4$. The image of $z_j,\ C_j$, and C by the mapping $\psi(z)$ are denoted by $z'_j,\ C'_j$, and C', respectively. Similarly to the proof of (i), for sufficiently large R, we see that the curve $C'_1C'_2C'_3$ is included in the upper half plane $\Im z > 0$, where $\Im z$ denotes the imaginary part of z. The difference of the argument between the starting point z'_1 of $C'_1C'_2C'_3$ and the ending point z'_4 is very small (see Figure 3).

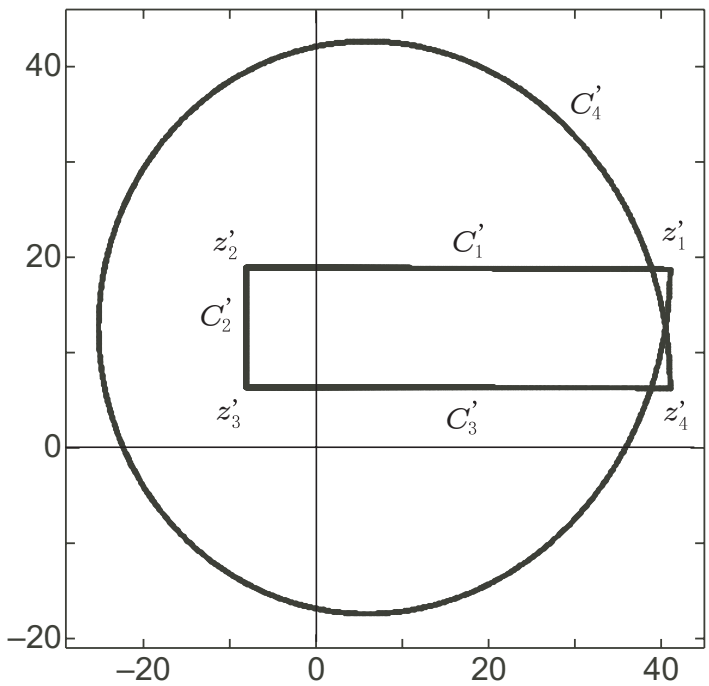

Figure 3: The image C' of C by the mapping $\psi(z)$ ($\lambda = 0.5,\ k = 1,\ R = 8$)

Therefore, for any $\epsilon > 0$ and sufficiently large R, we have

$$\Big| \int_{C_1C_2C_3} d \arg \psi(z) \Big| < \epsilon. \tag{3.8}$$

Similarly to the proof of (i), the change of the argument of $\psi(z)$ along C_4 satisfies

$$\Big| \int_{C_4} d \arg \psi(z) - 2\pi \Big| < \epsilon \tag{3.9}$$

for large R. From (3.8),(3.9), we have

$$\frac{1}{2\pi} \int_C d \arg \psi(z) = 1, \tag{3.10}$$

hence by the argument principle, we see that $\psi(z)$ has a unique zero ζ_k in the region surrounded by the closed curve C. Letting $R \to \infty$, we know that $z = \zeta_k$ is the unique zero in $S_k,\ k > 0$, and it is a simple zero. We can prove similarly for $k < 0$. □

We will also use the following lemma for determining the position of the zeros of $\psi(z)$. $\Re z$ denotes the real part of z.

Lemma 3.1 *$z = 1$ is the unique zero of $\psi(z)$ in the region $\Re z < \zeta_0$.*

Proof: We apply Rouché's theorem. Write $z = x + iy$. For sufficiently small $\epsilon > 0$ and large $R > 0$, we consider an open set $D = \{|z| < R,\ x < \zeta_0 - \epsilon\}$ and its boundary $C = \partial D$. For an arbitrary $z \in C$, we have

$$\begin{aligned} |z| &\geq \zeta_0 - \epsilon \\ &> \exp(\lambda(\zeta_0 - \epsilon - 1)) \\ &\geq \exp(\lambda(x-1)) \\ &= |\exp(\lambda(z-1))|. \end{aligned}$$

By Rouché's theorem, z has the same number of zeros as $\psi(z) = z - \exp(\lambda(z-1))$ does in D. Since z has one simple zero $z = 0$ in D, $z = 1$ is also the unique zero of $\psi(z)$ in D and is simple. By letting $\epsilon \to 0$, $R \to \infty$, we see that $z = 1$ is the unique zero of $\psi(z)$ in the region $\Re z < \zeta_0$. □

3.1. Coordinates of the zeros of $\psi(z)$

We will approximate the x-coordinate and y-coordinate of the kth zero ζ_k of $\psi(z)$.

Write $\zeta_k = x_k + iy_k,\ k \in \mathbb{Z}$. By comparing the real and imaginary parts of both sides of the equation

$$\zeta_k = \exp(\lambda(\zeta_k - 1)), \tag{3.11}$$

we have

$$x_k = \exp(\lambda(x_k - 1)) \cos \lambda y_k, \tag{3.12}$$

$$y_k = \exp(\lambda(x_k - 1)) \sin \lambda y_k. \tag{3.13}$$

Lemma 3.2 *The sequences $\{x_k\}_{k=0}^{\infty}$ and $\{y_k\}_{k=0}^{\infty}$ are monotonically increasing, i.e., $x_k < x_{k+1},\ y_k < y_{k+1},\ k = 0, 1, \ldots$, thus we have $|\zeta_k| < |\zeta_{k+1}|,\ k = 0, 1, \ldots$.*

Proof: We see from Theorem 3.1 that $\{y_k\}_{k=0}^{\infty}$ is monotonically increasing. We next show that $\{x_k\}_{k=0}^{\infty}$ is monotonically increasing, too.

From (3.12), (3.13), we have

$$x_k^2 + y_k^2 = \exp(2\lambda(x_k - 1)),\ k = 0, 1, \ldots. \tag{3.14}$$

Define $f(x) \equiv \exp(2\lambda(x-1)) - x^2$. We can write (3.14) as $f(x_k) = y_k^2$. We have $f'(x) = 2\{\lambda \exp(2\lambda(x-1)) - x\}$. By the graphs of $Y = \lambda \exp(2\lambda(x-1))$ and $Y = x$, we see that $f'(x) = 0$ has exactly two solutions $\alpha_1,\ \alpha_2$, with $0 < \alpha_1 < 1 < \alpha_2$. α_1 gives a local maximum of $f(x)$ and α_2 gives a local minimum. $f(x)$ is monotonically increasing in $x > \alpha_2$ and $f(x)$ goes to infinity as x does. The maximum of $f(x)$ in $0 \leq x \leq \alpha_2$ is $f(\alpha_1) = \exp(2\lambda(\alpha_1 - 1)) - \alpha_1^2 < 1$. Therefore, for any $\beta > 1$, the equation $f(x) = \beta$ has a

unique solution in $x > 0$. From Theorem 3.1 (ii), we have $y_k \geq y_1 > \dfrac{\pi}{\lambda} > 1,\ k = 1, 2, \ldots,$ hence, $x = x_k$ is the unique solution of

$$f(x) = y_k^2,\ k = 1, 2, \ldots$$

and, by the increasing property of $f(x)$, $y_k < y_{k+1}$ leads to $x_k < x_{k+1},\ k = 1, 2, \ldots$. The inequality $x_0 < x_1$ also holds because $f(x_0) = 0 = y_0^2$ and $x_0 > \alpha_2$. □

We will show an approximation of ζ_k. For $k > 0$, we have $y_k > 0$ from Theorem 3.1, and $x_k > 0$ from Lemma 3.1, hence from (3.12), (3.13), $\cos \lambda y_k > 0$, $\sin \lambda y_k > 0$. Thus,

$$\frac{2\pi k}{\lambda} < y_k < \frac{2\pi k + \pi/2}{\lambda}. \tag{3.15}$$

From Theorem 3.1 or (3.15), when k goes to infinity, y_k goes to infinity, thus from (3.13) x_k does, too. Therefore, from (3.12), we have $\cos \lambda y_k \to 0$, and thus from (3.15),

$$2\pi k - \lambda y_k \to \frac{\pi}{2}. \tag{3.16}$$

From (3.13), (3.16), we have

$$y_k \simeq \exp(\lambda(x_k - 1)), \tag{3.17}$$

and then ζ_k can be represented approximately as

$$\zeta_k \simeq \frac{1}{\lambda} \ln \frac{2\pi k + \pi/2}{\lambda} + 1 + i\frac{2\pi k + \pi/2}{\lambda},\ k \to \infty. \tag{3.18}$$

For $k < 0$, we have an approximation for ζ_k by (3.18) and $\zeta_k = \bar{\zeta}_{-k}$.

Among the zeros of $\psi(z)$, $z = 1$ is not a pole of $\pi(z)$ because $z = 1$ is a simple zero of $\psi(z)$ and the numerator of $\pi(z)$ has a factor $z - 1$. Therefore, the poles of $\pi(z)$ are $\{\zeta_k\}_{k \in \mathbb{Z}}$.

In summary,

Theorem 3.2 *The poles of $\pi(z)$ are $\{\zeta_k\}_{k \in \mathbb{Z}}$, all of which are simple poles. We have $|\zeta_k| < |\zeta_{k+1}|$ for $k = 0, 1, \ldots$. The pole ζ_k of $\pi(z)$ can be approximated as follows.*

$$\zeta_{\pm k} \simeq \frac{1}{\lambda} \ln \frac{2\pi k + \pi/2}{\lambda} + 1 \pm i\frac{2\pi k + \pi/2}{\lambda},\ k \to \infty. \tag{3.19}$$

We show, in the case of $\lambda = 0.5$, a comparison between the exact value of ζ_k and the approximation (3.19) in Figure 4.

4. Partial Fraction Expansion of $\pi(z)$

The principal part of $\pi(z)$ at $z = \zeta_k$ is $\alpha_k(z - \zeta_k)^{-1}$ with α_k the residue of $\pi(z)$ at $z = \zeta_k$. If $\pi(z)$ can be represented by a partial fraction of a form like $\pi(z) = \sum_k \alpha_k(z - \zeta_k)^{-1}$, the coefficients π_n of $\pi(z)$ has a series expansion. But, unfortunately, the partial fraction $\sum_k \alpha_k(z - \zeta_k)^{-1}$ does not converge, hence we need some idea to have a convergent series. For this purpose, we apply the following theorem.

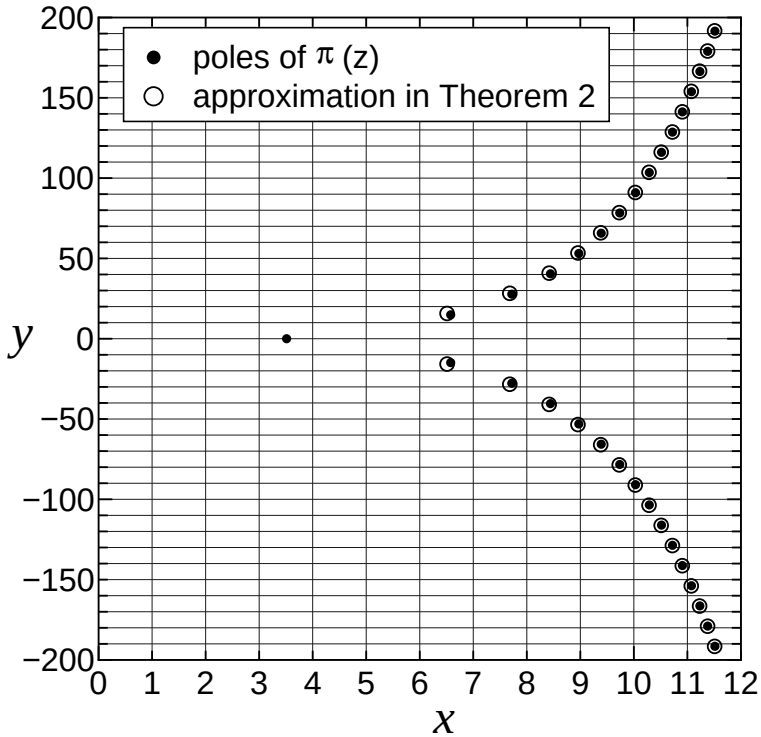

Figure 4: Comparison between the exact value of ζ_k and the approximation (3.19)

Theorem A (see [3]) Let $f(z)$ be holomorphic at $z = 0$ and meromorphic in $|z| < \infty$ with poles $\{\zeta_k\}_{k=1}^{\infty}$ all of which are of order 1. There is a sequence of rectifiable simple closed curves $\{C_m\}_{m=1}^{\infty}$ and every C_m includes the origin and poles $\{\zeta_k\}_{k=1}^{n_m}$ in its interior. $n_{m+1} - n_m$ are assumed to be bounded. Let l_m denote the length of C_m and ρ_m the distance between the origin and C_m. The residue of $f(z)$ at $z = \zeta_k$ is denoted by α_k. For an integer $q \geq 1$, assume $\alpha_k = o(\zeta_k^{q+1})$, $k \to \infty$, and $\rho_m \to \infty,\ l_m = O(\rho_m),\ f(z) = o(\rho_m^q),\ m \to \infty,\ z \in C_m$.

Then, for any $z \neq \zeta_k$, we have

$$f(z) = \sum_{j=0}^{q-1} \frac{f^{(j)}(0)}{j!} z^j - z^q \sum_{k=1}^{\infty} \frac{\alpha_k}{\zeta_k^q(\zeta_k - z)} \tag{4.1}$$

$$= \sum_{j=0}^{q-1} \frac{f^{(j)}(0)}{j!} z^j + \sum_{k=1}^{\infty} \alpha_k \Big(\frac{1}{z - \zeta_k} + \sum_{j=0}^{q-1} \frac{z^j}{\zeta_k^{j+1}} \Big) \tag{4.2}$$

The series (4.1),(4.2) converges absolutely and uniformly in wide sense in the region $\mathbb{C} - \{\zeta_k\}_k$. □

The residue α_k of our function $\pi(z)$ at $z = \zeta_k$ is obtained by

$$\alpha_k = \lim_{z \to \zeta_k} (z - \zeta_k)\pi(z)$$
$$= -\frac{(1-\lambda)\zeta_k(\zeta_k - 1)}{\lambda\zeta_k - 1}$$

So, applying the Theorem A, we have

Theorem 4.1 *$\pi(z)$ has the partial fraction expansion*

$$\pi(z) = \pi_0 + \pi_1 z - z^2 \sum_{k=-\infty}^{\infty} \frac{\alpha_k}{\zeta_k^2(\zeta_k - z)}, \tag{4.3}$$

$$\alpha_k = -\frac{(1-\lambda)\zeta_k(\zeta_k - 1)}{\lambda\zeta_k - 1}, \ k \in \mathbb{Z}. \tag{4.4}$$

The series (4.3) *converges absolutely and uniformly in wide sense in the region* $\mathbb{C} - \{\zeta_k\}_k$.
Proof: Let $q = 2$ in Theorem A. For $m = 1, 2, \ldots$, let C_m be the square with vertices

$$z_1 = \frac{2\pi m}{\lambda} + i\frac{2\pi m}{\lambda}, \ z_2 = -\frac{2\pi m}{\lambda} + i\frac{2\pi m}{\lambda},$$
$$z_3 = -\frac{2\pi m}{\lambda} - i\frac{2\pi m}{\lambda}, \ z_4 = \frac{2\pi m}{\lambda} - i\frac{2\pi m}{\lambda}.$$

From Theorem 3.1, the poles $\{\zeta_k\}_{k=-(m-1)}^{m-1}$ are included in the interior of C_m, thus $n_m = 2m - 1$. Denoting by l_m the length of C_m and ρ_m the distance between the origin and C_m, we have $l_m = 16\pi m/\lambda, \ \rho_m = 2\pi m/\lambda$, so, $\rho_m \to \infty, \ l_m = O(\rho_m), \ m \to \infty$. We have

$$|\alpha_k| = \left|\frac{(1-\lambda)\zeta_k(\zeta_k - 1)}{\lambda\zeta_k - 1}\right| = o(\zeta_k^3), \ k \to \infty.$$

We next show $\pi(z) = o(\rho_m^2), \ z \in C_m, \ m \to \infty$. We first consider the case that z is on the line segment $z_1 z_2$. $z = z_t$ is represented as

$$z_t = t + i\frac{2\pi m}{\lambda}, \quad -\frac{2\pi m}{\lambda} \le t \le \frac{2\pi m}{\lambda}.$$

We can write

$$\pi(z) = \frac{(1-\lambda)(z-1)}{z\exp(-\lambda(z-1)) - 1},$$

then, defining $g(z) \equiv z\exp(-\lambda(z-1)) - 1$, we show

$$|g(z_t)|^2 \ge \gamma, \ z_t \in C_m,$$

where γ is a positive constant which does not depend on m. In fact,

$$\begin{aligned}|g(z_t)|^2 &= (t\exp(-\lambda(t-1)) - 1)^2 + (2\pi m\lambda^{-1}\exp(-\lambda(t-1)))^2 \\ &\ge (t\exp(-\lambda(t-1)) - 1)^2 + (2\pi\lambda^{-1}\exp(-\lambda(t-1)))^2 \\ &\ge \gamma\end{aligned}$$

This implies that $\pi(z) = o(\rho_m^2)$ if z is on the line segment $z_1 z_2$. In the case that z is on $z_3 z_4$, we can show that $\pi(z) = o(\rho_m^2)$ in a similar way. Moreover, we can easily show $\pi(z) = o(\rho_m^2)$ when z is on $z_2 z_3$ and $z_4 z_1$. In consequence, $\pi(z)$ satisfies all the assumptions in Theorem A with $q = 2$. Then $\pi(z)$ has the following expression;

$$\begin{aligned}\pi(z) &= \pi_0 + \pi_1 z - z^2 \sum_{k=-\infty}^{\infty} \frac{\alpha_k}{\zeta_k^2(\zeta_k - z)} \\ &= \pi_0 + \pi_1 z + (1-\lambda)z^2 \sum_{k=-\infty}^{\infty} \frac{\zeta_k - 1}{\zeta_k(\lambda\zeta_k - 1)} \frac{1}{\zeta_k - z}.\end{aligned}$$

5. Series Expansion of π_n

From the partial fraction expansion (4.3), we have

$$\pi(z) = \pi_0 + \pi_1 z + (1-\lambda)z^2 \sum_{k=-\infty}^{\infty} \frac{\zeta_k - 1}{\zeta_k^2(\lambda\zeta_k - 1)} \sum_{n=0}^{\infty} \left(\frac{z}{\zeta_k}\right)^n \tag{5.1}$$

for z with sufficiently small absolute value. The summation in n converges uniformly in k, hence we can change the order of the summations to obtain the following series expansion of $\pi_n,\ n \geq 2$.

$$\pi_n = (1-\lambda) \sum_{k=-\infty}^{\infty} \frac{\zeta_k - 1}{\lambda\zeta_k - 1} \frac{1}{\zeta_k^n} \tag{5.2}$$

$$= (1-\lambda)\Big\{ \frac{\zeta_0 - 1}{\lambda\zeta_0 - 1} \frac{1}{\zeta_0^n} + 2\sum_{k=1}^{\infty} \mathrm{Re}\Big(\frac{\zeta_k - 1}{\lambda\zeta_k - 1} \frac{1}{\zeta_k^n} \Big) \Big\},\ n \geq 2. \tag{5.3}$$

5.1. Upper and lower bounds for π_n

For the principal part $p_0(z) = \alpha_0/(z - \zeta_0)$ of $\pi(z)$ at $z = \zeta_0$, define

$$f(z) \equiv \pi(z) - p_0(z). \tag{5.4}$$

$z = \zeta_0$ is a removable singularity of $f(z)$. The poles of $f(z)$ with the smallest absolute value are $z = \zeta_1,\ \zeta_{-1}$. Let $f(z) = \sum_{n=0}^{\infty} d_n z^n$ be the power series expansion of $f(z)$ at the origin, then from (5.4) and

$$p_0(z) = -\frac{\alpha_0}{\zeta_0} \sum_{n=0}^{\infty} \left(\frac{z}{\zeta_0}\right)^n,$$

we have

$$\pi_n = -\frac{\alpha_0}{\zeta_0^{n+1}} + d_n, \quad n = 0, 1, \ldots. \tag{5.5}$$

For arbitrary r with $\zeta_0 < r < |\zeta_1|$, defining $M_1(r) = \max_{|z|=r} |f(z)|$, we obtain by Cauchy's estimate that

$$|d_n| \leq \frac{M_1(r)}{r^n},\ n = 0, 1, \ldots.$$

Thus from (5.5) we have the following estimates for π_n;

$$-\frac{\alpha_0}{\zeta_0^{n+1}} - \frac{M_1(r)}{r^n} \leq \pi_n \leq -\frac{\alpha_0}{\zeta_0^{n+1}} + \frac{M_1(r)}{r^n},\ n = 0, 1, \ldots.$$

In a similar way, we have

Theorem 5.1 *Define*

$$f_K(z) \equiv \pi(z) - \sum_{k=-K}^{K} \frac{\alpha_k}{z - \zeta_k},\ K = 0, 1, \ldots \tag{5.6}$$

and

$$M_K(r) = \max_{|z|=r} |f_K(z)| \tag{5.7}$$

for r with $|\zeta_K| < r < |\zeta_{K+1}|$. Then π_n is evaluated as follows;

$$-\sum_{k=-K}^{K} \frac{\alpha_k}{\zeta_k^{n+1}} - \frac{M_K(r)}{r^n} \le \pi_n \le -\sum_{k=-K}^{K} \frac{\alpha_k}{\zeta_k^{n+1}} + \frac{M_K(r)}{r^n}, \ n = 0, 1, \ldots \tag{5.8}$$

6. Numerical Result

We show in Figure 5 the comparison of the exact value of π_n and the proposed upper bound obtained by Theorem 4 with $K = 1$, i.e., the upper bound is

$$\pi_n \le -\frac{\alpha_0}{\zeta_0^{n+1}} + \frac{M_1(r)}{r}, \ n = 0, 1, \ldots. \tag{6.1}$$

Three cases $\lambda = 0.1, 0.5$ and 0.9 are shown in Figure 5. The parameters are written in Table 1. In Figure 5, the black circle indicates the exact value and the white one the upper bound (6.1). The calculation of π_n is due to the recursive formula given by $\pi = \pi P$. The computational complexity of this recursive formula is $O(n^2)$, whereas that of our upper bound is $O(1)$. The computational complexity of the direct expression (2.4) of π_n is $O(n)$, but it is numerically unstable because it includes alternating additions of positive and negative numbers of very large absolute value.

Table 1: The parameters of upper bound (6.1)

λ	ζ_0	α_0	r	$M_1(r)$
0.1	37.1	−444.8	84.0	384.0
0.5	3.5	−5.8	16.0	60.6
0.9	1.2	−0.026	8.0	0.95

7. Conclusion

We studied the stationary probabilities π_n of the queue length of an M/D/1 queue. We determined the series expansion of π_n with the poles and their associated residues of $\pi(z)$. Upper and lower bounds for π_n are also provided.

An M/D/1 is a simple queueing model, but the proofs of the theorems are complicated. We would like to improve and simplify our proof to attack more complex Markov chains.

Acknowledgement

The author thanks the reviewers for their valuable comments and suggestions to improve the results of this paper.

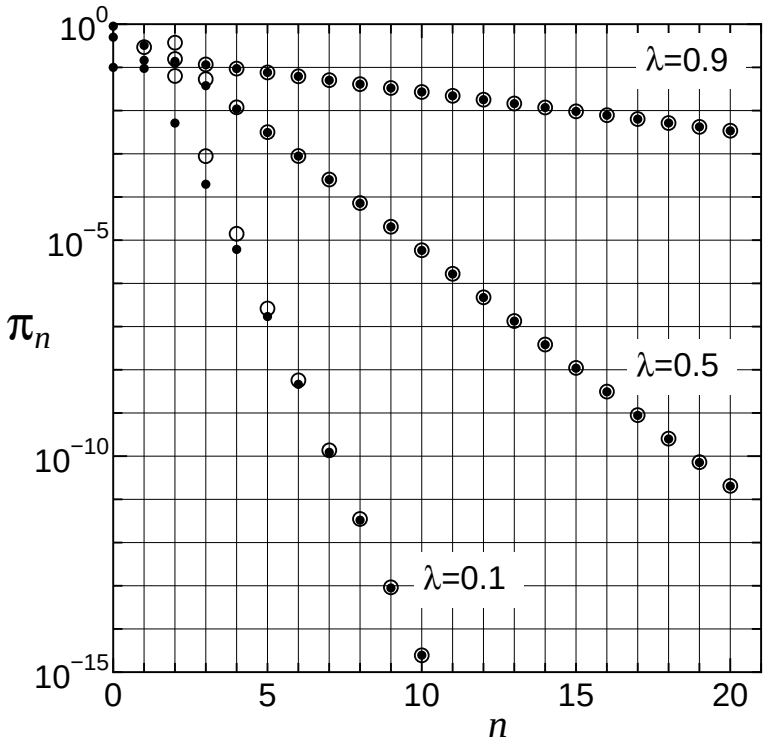

Figure 5: The comparison of π_n and the upper bound

References

[1] D. Gross and C. Harris: *Fundamentals of Queueing Theory* (Wiley, 1985).

[2] J.F. Hayes and T.V.J. Ganesh Babu: *Modeling and Analysis of Telecommunications Networks* (Wiley, New Jersey, 2004).

[3] Y. Komatsu: *Theory of Functions* (Asakura, 1960 (in Japanese)).

Kenji Nakagawa
Nagaoka University of Technology
Nagaoka, Niigata 940-2188, Japan
Tel&Fax 0258-47-9523
E-mail: `nakagawa@nagaokaut.ac.jp`